Date & Time

© Oliv Soft, 2010

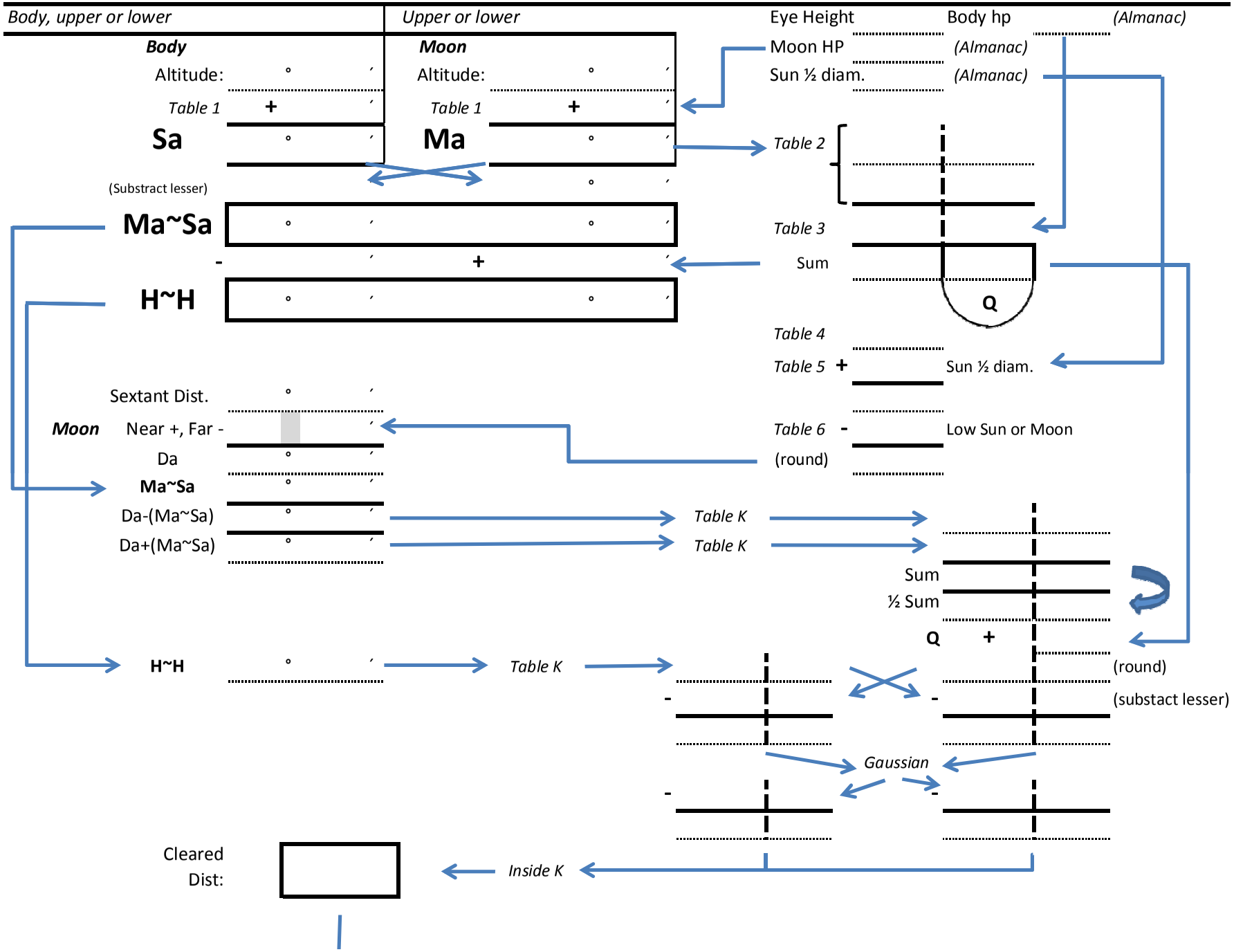

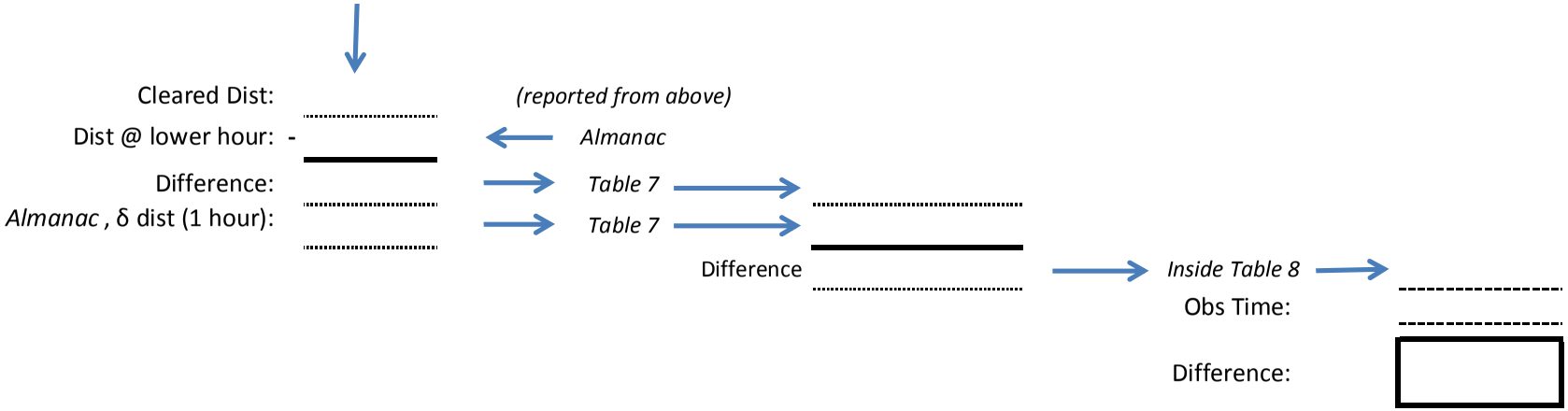

Designed 6-Feb-2010

Date & Time 23 Dec 2009, 23:11:00 UTC

© Oliv Soft, 2010

Body, upper or lower	Sun LL		Upper or lower	LL	
Body			**Moon**		
Altitude:	15 °	15.0 ′	Altitude:	41 °	23.0 ′
Table 1	+	13.6 ′	Table 1	+	12.4 ′
Sa	15 °	28.6 ′	**Ma**	41 °	35.4 ′
(Substract lesser)				15 °	28.6 ′
Ma~Sa	°	′		26 °	6.8 ′
-	′		+		44.4 ′
H~H	°	′		26 °	51.2 ′

Eye Height	8′	Body hp	(Almanac)
Moon HP	54.9′	(Almanac)	
Sun ½ diar	16.26′	(Almanac)	
Table 2	40.07	442.0	
	1.05	012.0	
Table 3	3.31	000.6	
Sum	44.43	454.6	
		Q	
Table 4	15.12		
Table 5 +	16.29	Sun ½ diam.	
	31.41		
Table 6 -		Low Sun or Moon	
(round)	31.41		

Sextant Dist.	81 °	1.00 ′					
Moon Near +, Far -	+	31.41 ′					
Da	81 °	32.41 ′					
Ma~Sa	26 °	6.80 ′					
Da-(Ma~Sa)	55 °	25.61 ′	Table K	0.66	500		
Da+(Ma~Sa)	107 °	39.21 ′	Table K	0.18	600		
			Sum	0.85	100		
			½ Sum	0.42	550		
			Q +		454.6		
H~H	26 °	51.20 ′	Table K	1.26	827	0.43	004.6 (round)
			-	0.43	005	-	(substact lesser)
				0.83	822		
						Gaussian	
			-			-	0.05 886
							0.37 119

Cleared Dist: 81°25.25′ ← Inside K

Cleared Dist:	81°25.25'	(reported from above)						
Dist @ lower hour: -	81°19.94'	Almanac	at 23:00:00 UTC					
Difference:	00°05.31'	Table 7	1.6559					
Almanac , δ dist (1 hour):	27.7355'	Table 7	0.9377					
			Difference	0.7182		Inside Table 8	11m 29s	
						Obs Time:	11m 00s	
						Difference:	29s	

Designed 6-Feb-2010